Reg. No. | | | | | | | | | | |

[12EE63/13EE64]

SIXTH SEMESTER B.E/B.TECH EXAMINATION, JUNE-2016

ELECTRICAL DRAWING

Time:3 Hours

Maximum Marks:70

Instructions:

1. Answer any **THREE full** Questions from part A and any ONE question from part B.
2. Missing data may be suitably assumed.

PART-A

1. a. Draw the block diagram of a Thermal Plant incorporating the following: **07**
Coal storage and handling site, Boiler economizer, Turbine, Generator and its bus, Ash handling site, Ash storage and disposal site, Air heaters, Dust collector, forced draught fan, chimney, Cooling tower, Condenser, Low and high pressure heaters and pumps.

b. A receiving station is connected to 66kV transmission line and has the following main equipment. **07**

i. Duplicate incoming lines

ii. Two bank of 4MVA, 66/11 kV transformers, one on each HT bus section. The two sections are coupled by a bus coupler.

iii. LT bus in two sections. A vacuum circuit breaker is used to couple them.

iv. Five, 11kV outgoing lines on one section and three on the other.

Draw the single line diagram of the receiving station incorporating protective devices (circuit breakers, lightning arrestors), disconnecting switches and instrument transformers.

2. Draw the developed winding diagram and ring diagram of armature of a dc generator to satisfy the following data. **14**
Number of conductors: 40, Number of poles: 6, Number of coil sides per slot:2, Number of parallel paths: 4,
Show the direction of emf induced in the conductor, polarity of brushes and poles. Assume the direction of rotation for the developed winding diagram to be from left to right.

3. Draw the developed winding diagram of an AC machine having the following details: **14**
Numbers of phases : 3, Number of poles: 4, Number of slots: 24, RYB phase sequence, 60° phase spread, Number of coil sides per layer: one. The winding is double layer wave and is chorded by one slot. The winding is to be connected in delta.

4. Draw the developed winding diagram for an AC three phase rotating machine with the following details: **14**

Number of poles:4, Number of slots: 36, Number of coils: 18. Full pitch winding. The phase sequence is RYB. The coils are shaped to have long and short coil sides.

PART-B

5. a. Draw the sectional end elevation and front elevation of the pole. **14**

Take width of the pole=14cm, pole arc=20cm, height of the pole with pole shoe = 20cm, radius pole arc = 28cm, yoke thickness =1cm.

Show clearly the method of fixing the pole core laminations and the pole core with yoke.

b. The details of the rotor of an alternator consisting of shaft, spider and poles are given below. **14**

Shaft : Made of mild steel, Radius : 3.0cm

Spider : Made of cast steel. It has 4 dovetailed slots at its out surface. The angle between the centre lines of the dovetails is 90°. The shape of spider is square of sides 20cm. Distance between the centre of the shaft and bottom of the dovetail is 8cm. Width of the dovetail at the bottom and top are respectively 5.0 and 2.5cm. Size of the retaining plate: 6cm width and 2cm height. On both sides of the dovetail, there are holes of diameter 0.5cm for fixing the retaining plate to the spider.

Pole core: Made of sheet steel laminations and are fixed rigidly by suitable bolts and nuts at regular intervals. Height of the dovetail in the pole core: 2.0cm. Height of the pole core above dovetail: 8.0cm. Width of the pole core: 10.0 cm, Width of the pole shoe face on each side of the body: 2.5cm. Radius of the pole arc at the top of the pole face from the centre of the shaft: 20.0cm.

Pole winding: Field winding is due to enamelled wire. Height of the winding: 8.0cm. Width of the field winding: 15cm. Insulation between core and winding: 0.2cm.

Looking from the shaft end, draw the half sectional end view of the rotor assembly.

6. The following are the design details of a 575kVA, 7500/435V, 50Hz, single phase core type oil immersed self-cooled power transformer. **28**

a. Core and Yoke details:

Diameter of circumscribing circle=33cm, window dimensions=16cm × 43cm, core is a 3 stepped one having the following details. Width of the central stack=13.9cm, Width of outer stack (each) = 3.3cm, width of middle stack (each) = 4.6cm, Yoke had the same section as that of core.

b. LV Winding:

Number of coils/limb=one, radial width of each coil=23mm, coil depth=35.2, slack end insulation, bracing etc., = 7.8cm outside diameter, number of turns in each coil=11.

c. HV winding:

Number of coils / limb=2, radial width of each coil=9mm, axial depth of one turn=3.5mm, coil depth=34.6cm, end insulation bracing etc., = 8.4cm, number of turns/limb=189 made of 95 in one coil and 94 in the other, outside diameter of first former=41.55cm and outside diameter of second former=45.05cm.

Allowance between HV coils on each limb for cooling duct and former=0.85cm, allowance between LV and HV coils for cooling duct and former=1.6cm.

Draw to a suitable scale sectional elevation and sectional plan of only one limb.

OR

Figure Q6 shows the parts of a commutator. Assemble the parts and draw to a suitable scale, Half sectional elevation and half sectional end view. Consider the view along the shaft as elevation. **28**

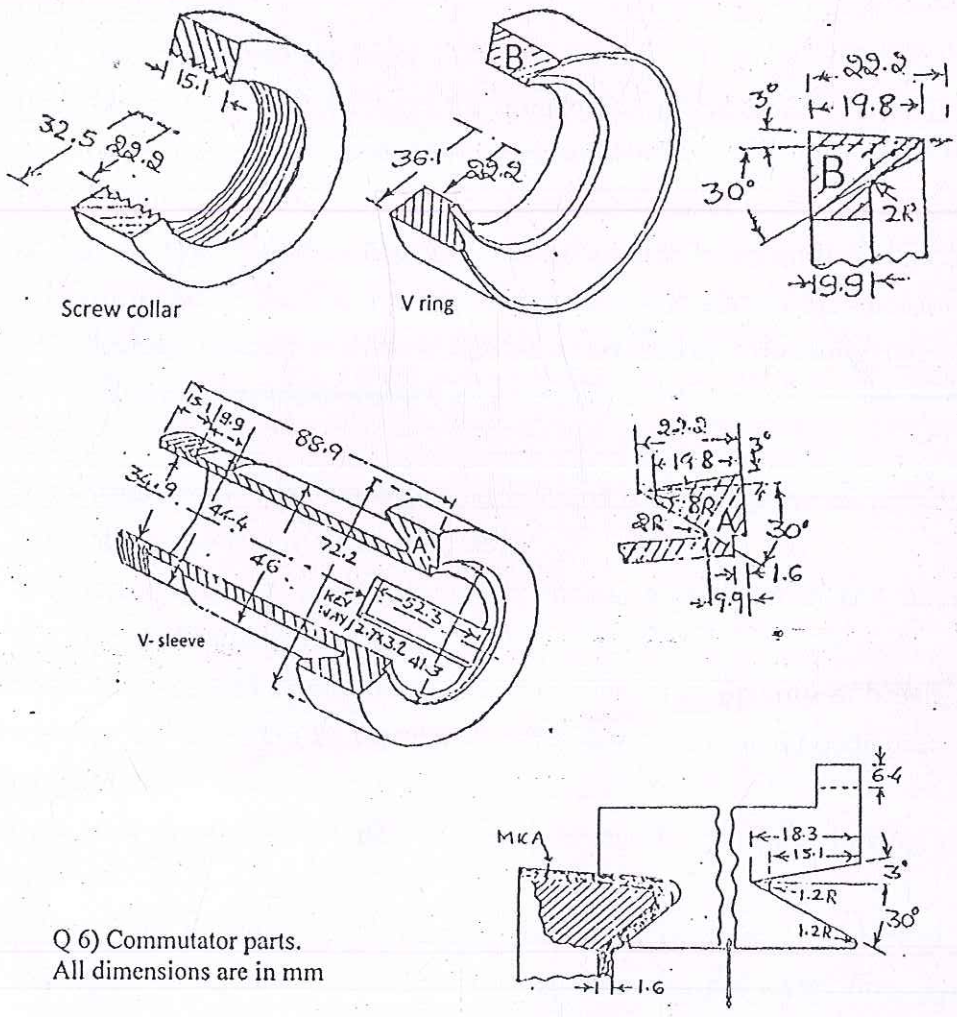

Q 6) Commutator parts.
All dimensions are in mm

—— X ——